usenix
THE ADVANCED COMPUTING SYSTEMS ASSOCIATION

北京大学 人工智能研究院
INSTITUTE FOR ARTIFICIAL INTELLIGENCE, PEKING UNIVERSITY

Breaking the Layer Barrier: Remodeling Private Transformer Inference with Hybrid CKKS and MPC

Tianshi Xu[1], Wen-jie Lu[2], Jiangrui Yu[1], Yi Chen[1],
Chenqi Lin[1], Runsheng Wang[1], Meng Li[1] .
[1]Peking University, [2]TikTok.

Outline

- Background of Private Transformer Inference
- Motivation of BLB
- Method
- Experimental Results

Outline

- ❑ Background of Private Transformer Inference
- ❑ Motivation of BLB
- ❑ Method
- ❑ Experimental Results

Outline

- **Privacy-Preserving Inference for Transformer**
  - Transformer-based LLMs have been deployed in many data sensitive scenarios

Outline

- **Privacy-Preserving Inference for Transformer**
  - Transformer-based LLMs have been deployed in many data sensitive scenarios
  - Cryptography-based private inference offers strong provable protection of both model and user input

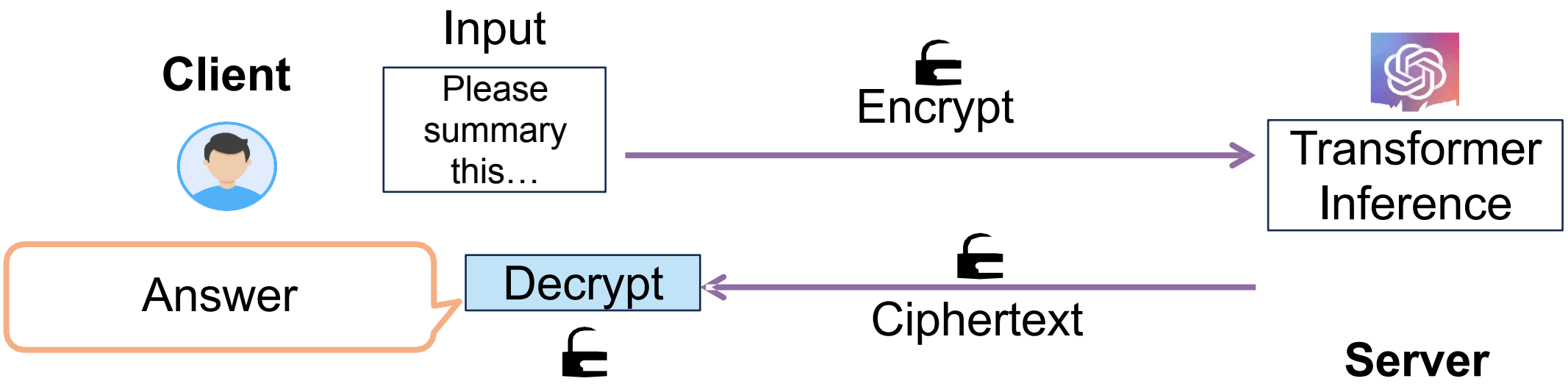

Outline

- **Problems of Private Transformer Inference**
  - Fully Homomorphic Encryption (**FHE**)
    - Fail to handle nonlinear layer (Bad accuracy and excessive computation due to bootstrapping)

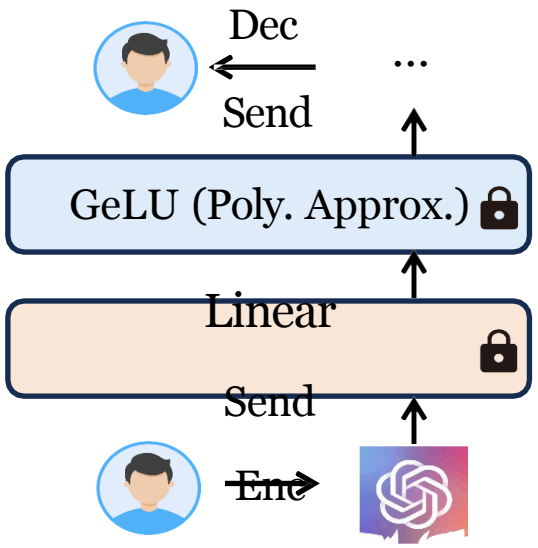

(b) Non-interactive FHE

Outline

- **Problems of Private Transformer Inference**
  - Fully Homomorphic Encryption (**FHE**)
    - Fail to handle nonlinear layer (Bad accuracy and excessive computation due to bootstrapping)
  - Homomorphic Encryption + Secure Multi-party Computation (hybrid **HE/MPC**)
    - High accuracy, but excessive communication (60GB for a BERT-base inference)

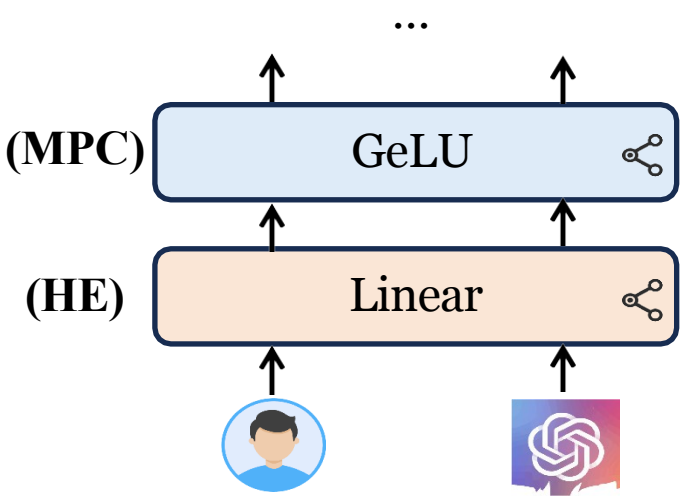

(a) Interactive HE/MPC

	Accuracy	Communication	Computation
HE/MPC	○	☹	○
FHE	☹	○	☹
BLB (ours)	○	○	○ (GPU)

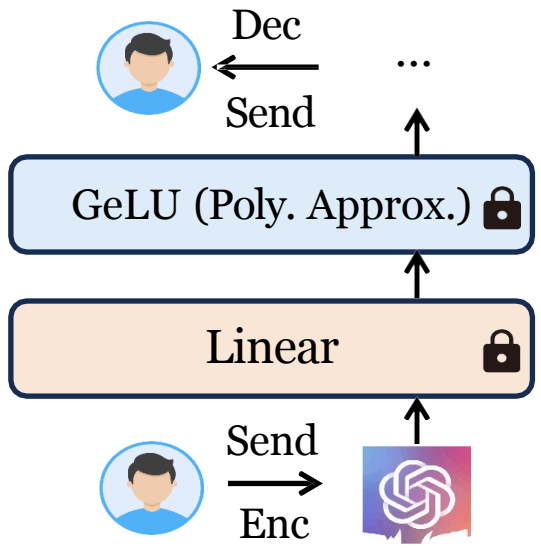

(b) Non-interactive FHE

Outline

- **Problems of Private Transformer Inference**
  - Fully Homomorphic Encryption (**FHE**)
    - Fail to handle nonlinear layer (Bad accuracy and excessive computation due to bootstrapping)
  - Homomorphic Encryption + Secure Multi-party Computation (hybrid **HE/MPC**)
    - High accuracy, but excessive communication (60GB for a BERT-base inference)
  - Optimization Golden Rule: Accuracy > Communication > Computation

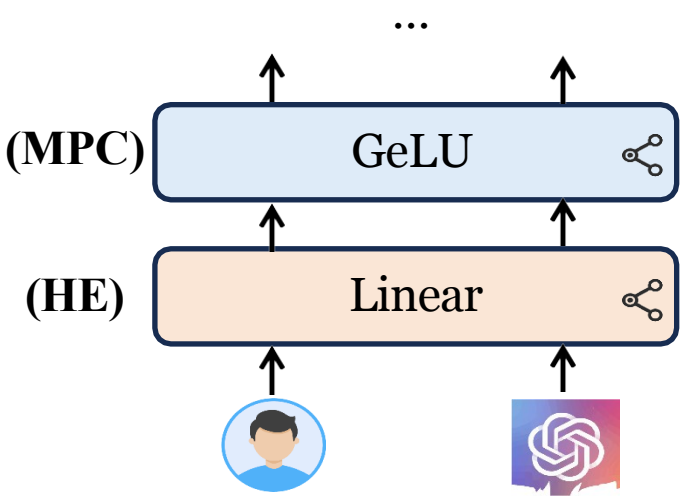

(a) Interactive HE/MPC

	Accuracy	Communication	Computation
HE/MPC	○	☹	○
FHE	☹	○	☹
BLB (ours)	○	○	○ (GPU)

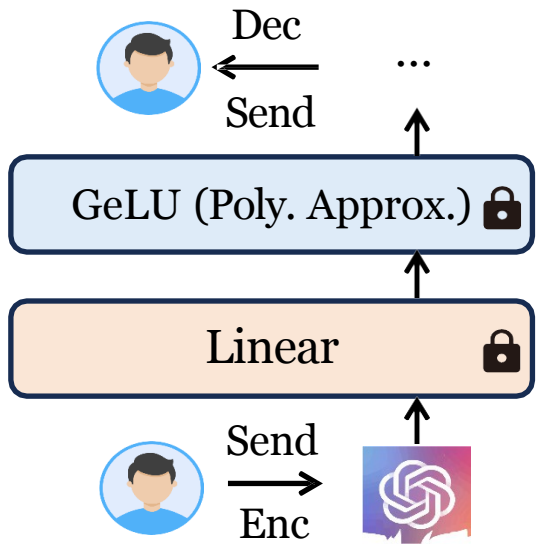

(b) Non-interactive FHE

Outline

- Background of Private Transformer Inference
- Motivation of BLB
- Method
- Experimental Results

Motivation

Private Inference with Hybrid HE/MPC

- Linear layers: Homomorphic Encryption (HE)
- Nonlinear layers: Secure Multi-party Computation (MPC)

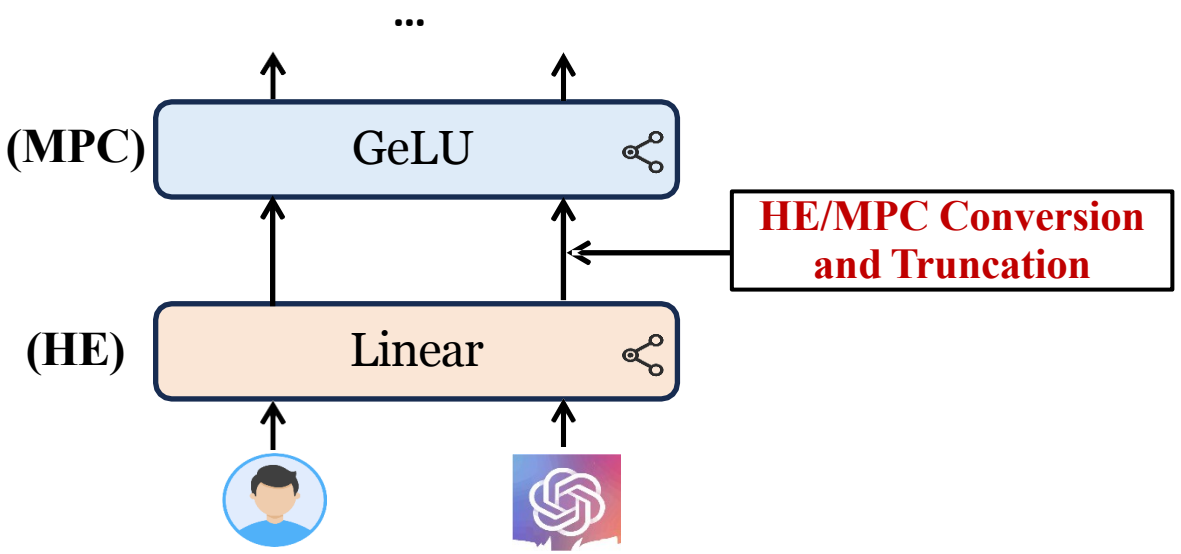

(a) Hybrid HE/MPC framework

Motivation

Private Inference with Hybrid HE/MPC

- Linear layers: Homomorphic Encryption (HE)
- Nonlinear layers: Secure Multi-party Computation (MPC)
- Communication comes from: HE/MPC Conversions and Truncations cost dominates (>80%)

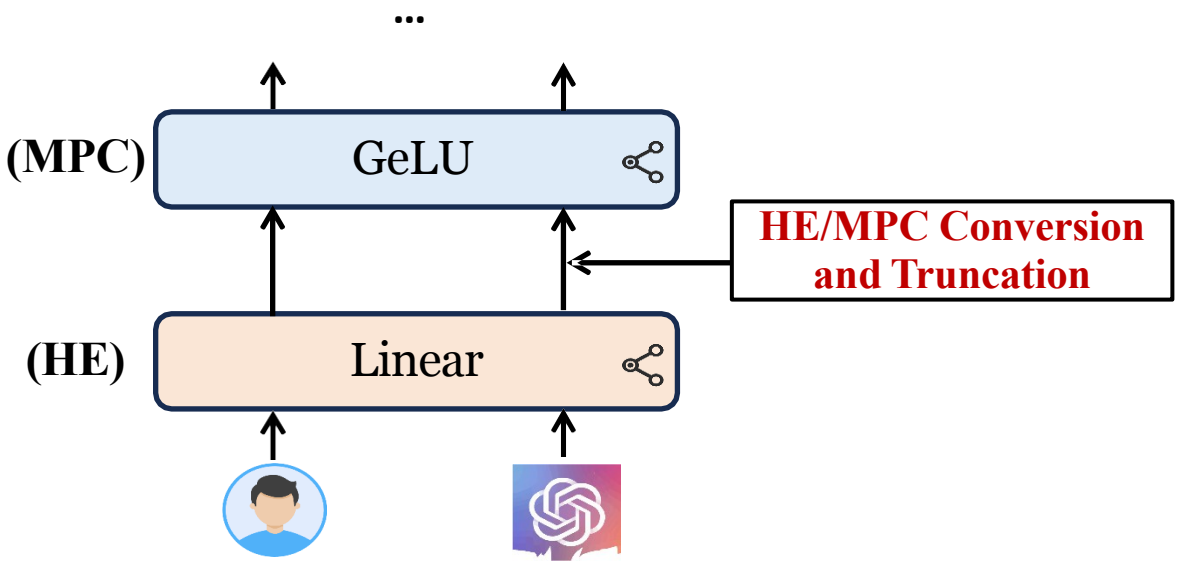

(a) Hybrid HE/MPC framework

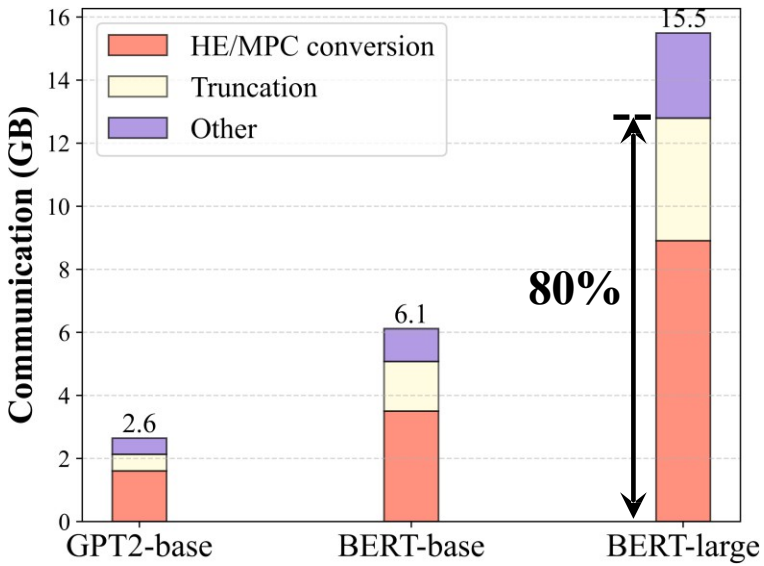

(b) Communication breakdown

Motivation

Private Inference with Hybrid HE/MPC

- ❑ Linear layers: Homomorphic Encryption (HE)
- ❑ Nonlinear layers: Secure Multi-party Computation (MPC)
- ❑ Communication comes from: HE/MPC Conversions and Truncations cost dominates (>80%)

❑ **Our Goal:** Reduce communication overhead in hybrid HE/MPC for Transformer inference

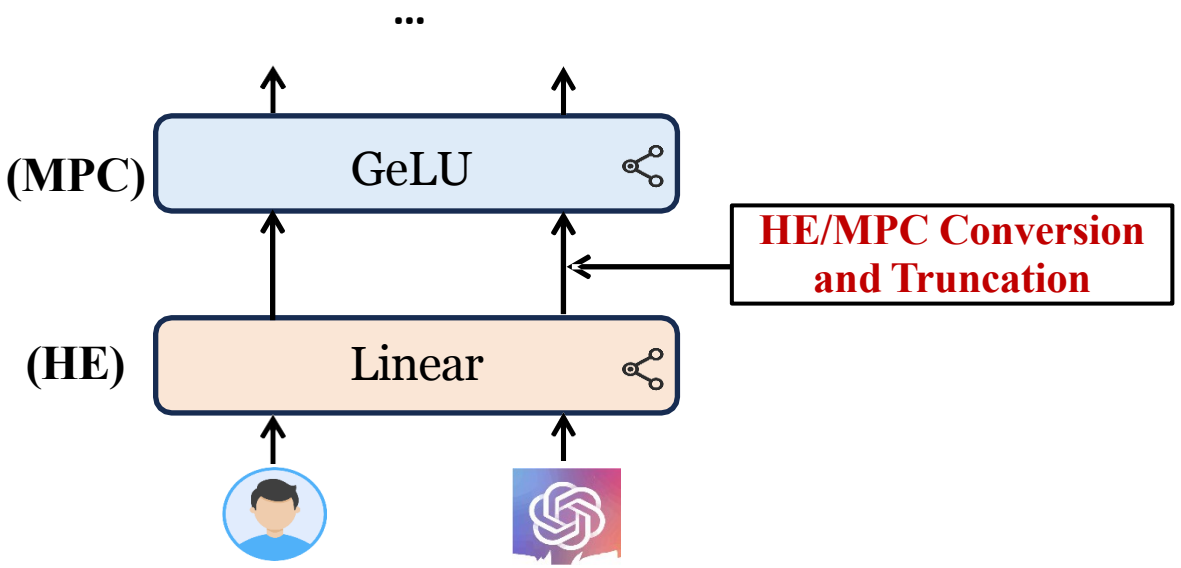

(a) Hybrid HE/MPC framework

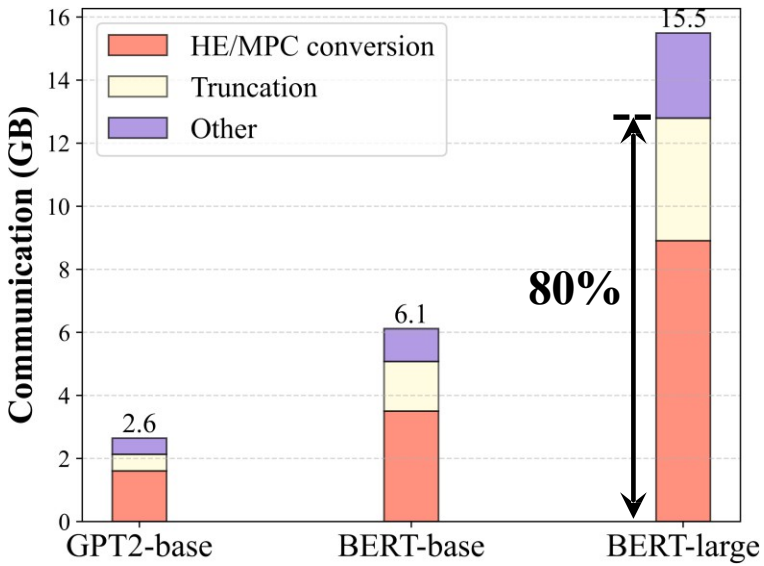

(b) Communication breakdown

Motivation

HE/MPC Conversions and Truncations cost dominates (>80%)

- HE/MPC (Secret Share) Conversion
- Truncation: Restore scale in fixed-point arithmetic

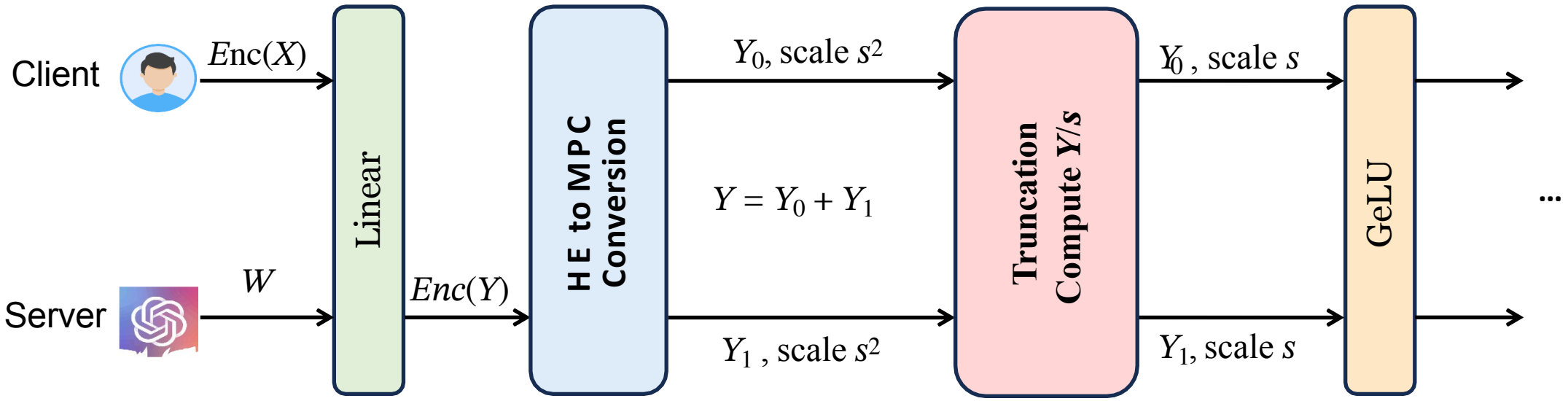

$Enc(\cdot)$: Encryption Y_0, Y_1: secret share of Y

Motivation

Previous Solution: Linear Layer Fusion

- Using HE to evaluate consecutive linear layers within a single communication round
- Eliminating all conversions and truncations between consecutive linear layers

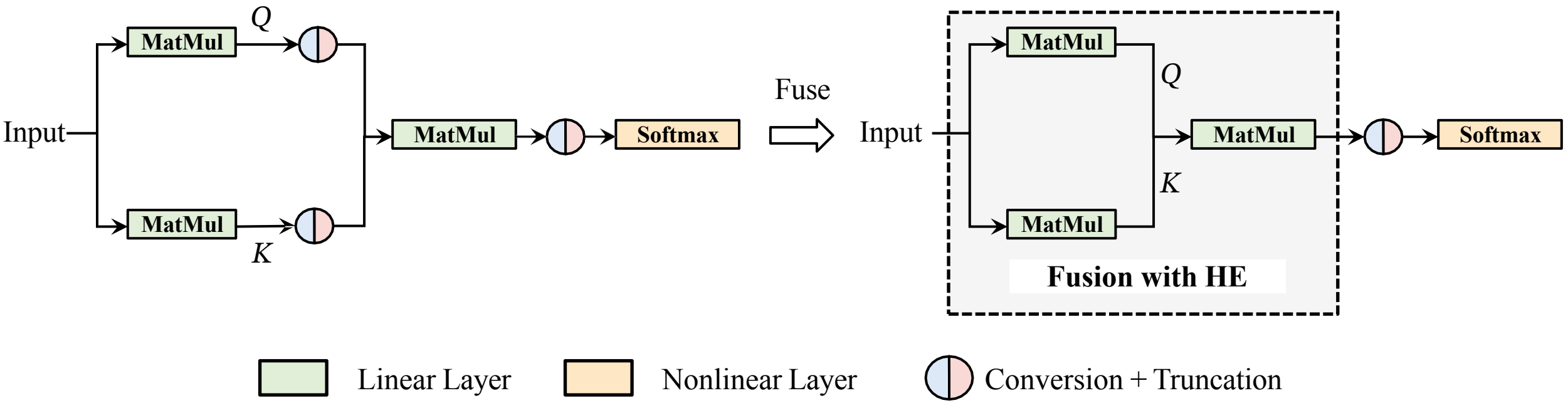

Motivation

Previous Solution: Linear Layer Fusion

- Using HE to evaluate consecutive linear layers within a single communication round
- Eliminating all conversions and truncations between consecutive linear layers
- Example: $QK^T, Q = XW_Q, K = XW_K$

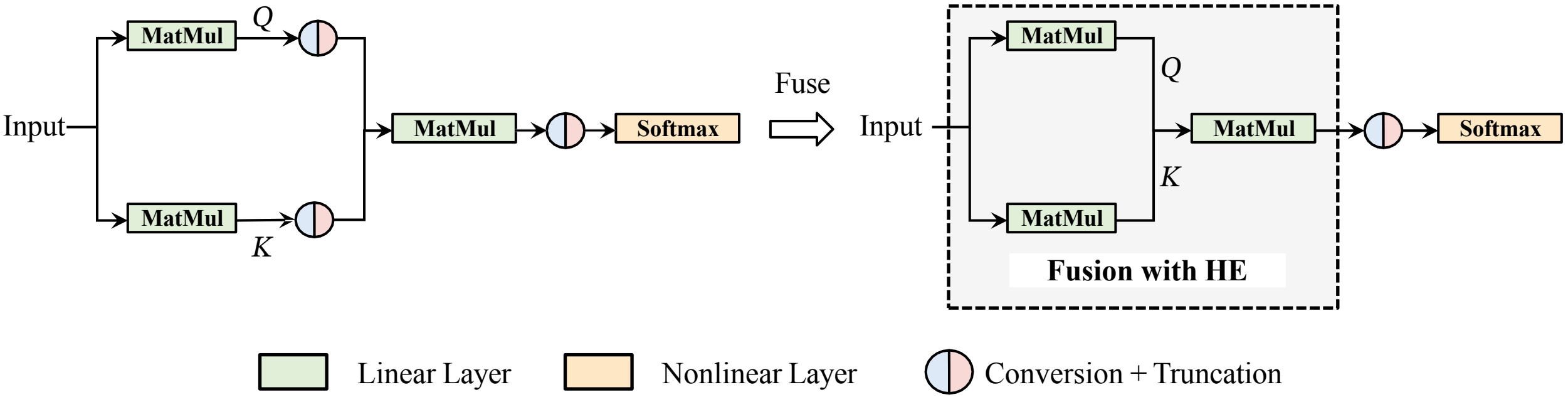

Motivation

Three Limitations of Linear Layer Fusion

- **Limitation 1: Limited Flexibility**
  - Only two consecutive Matrix Multiplications QK^T can be fused in one Transformer block

Only here can be fused!

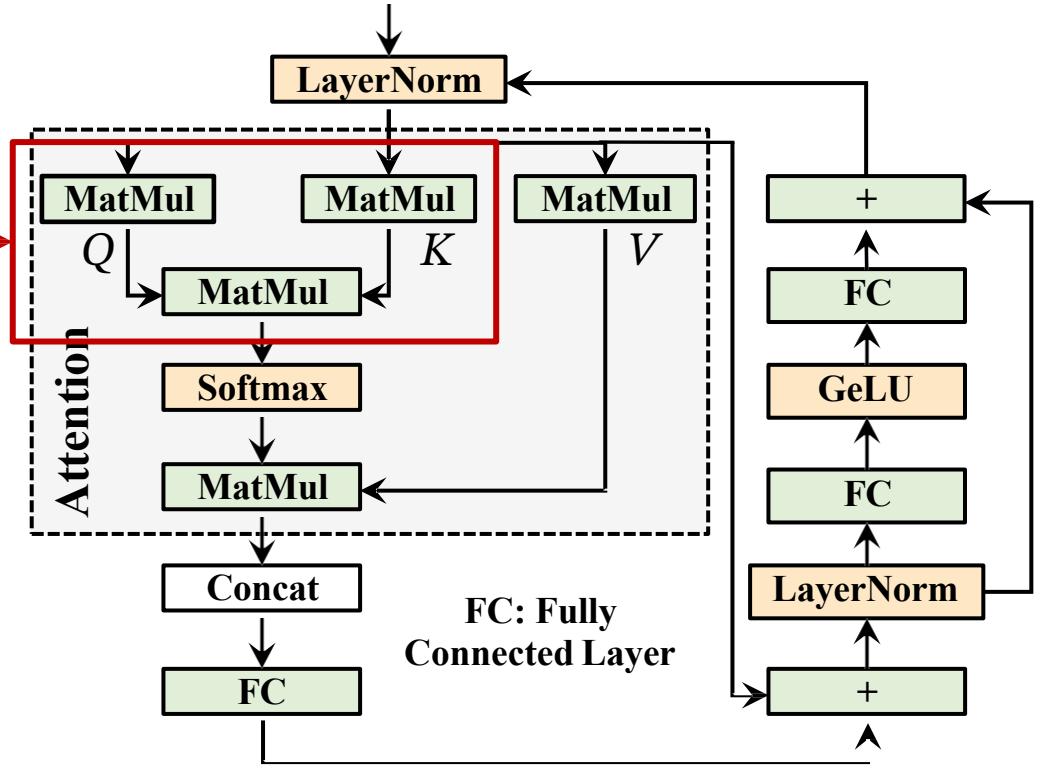

Fig: A Transformer block

Motivation

Three Limitations of Linear Layer Fusion

- **Limitation 2: High Ciphertext Bit Width using BFV/MPC**
  - BFV cannot reduce scale, needs exponential scale growth with multiplication depth
  - Exponential growth of scale, plaintext bit-width and ciphertext bit-width

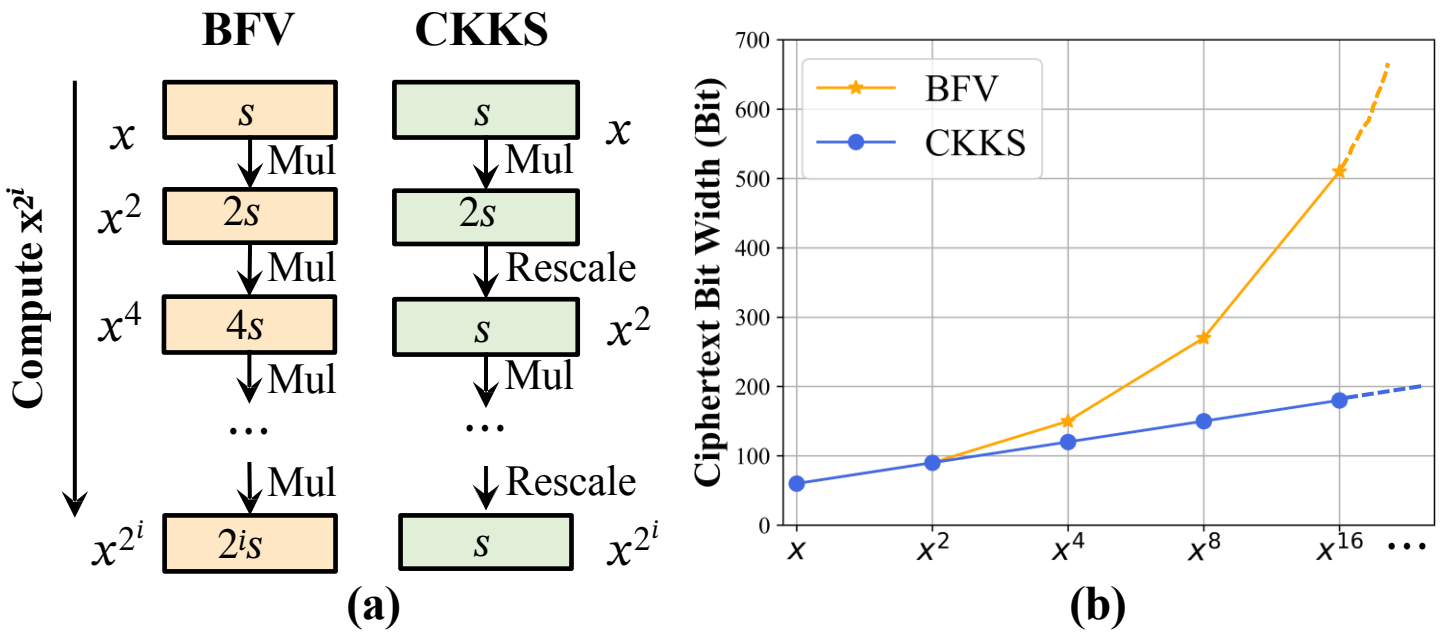

Motivation

Three Limitations of Linear Layer Fusion

- **Limitation 3: Suboptimal MatMul Protocol after Fusion**
  - Ciphertext-Ciphertext (ct-ct) Matrix Multiplication in HE is extremely complicated!
  - Adjusting the packing of intermediate ciphertexts involves complex HE operations

Motivation

Three Limitations of Linear Layer Fusion

- **Limitation 3: Suboptimal MatMul Protocol after Fusion**
  - Ciphertext-Ciphertext (ct-ct) Matrix Multiplication in HE is extremely complicated!
  - Adjusting the packing of intermediate ciphertexts involves complex HE operations
  - BOLT(S&P'24) requires approximately 20× more computationally-intensive HE rotations for fused ct-ct MatMul compared to unfused Ciphertext-Plaintext (ct-pt) protocol

同态矩阵乘法

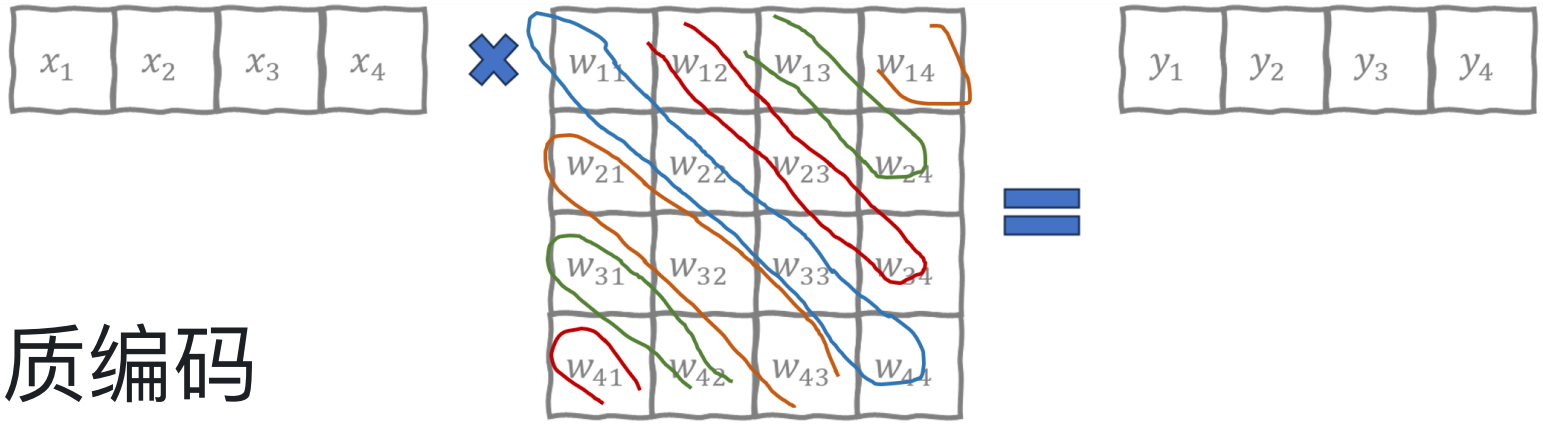

利用HE密文的SIMD性质编码

密文操作

- 乘（开销高）
- 加
- 旋转（开销高）

效率取决于编码方式

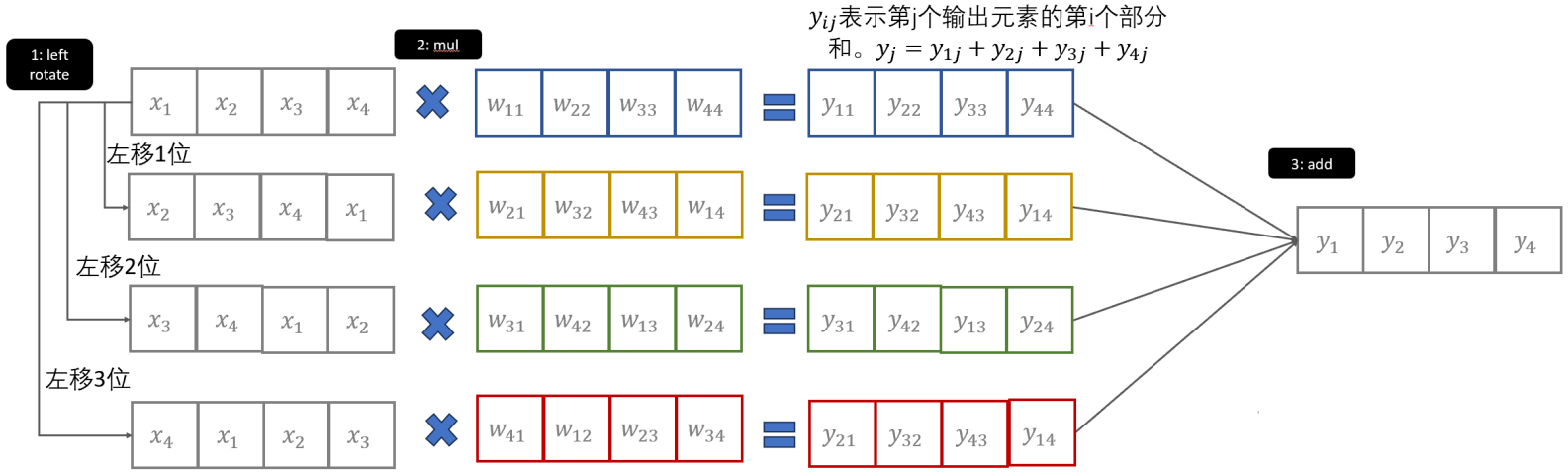

Outline

- ❑ Background of Private Transformer Inference
- ❑ Motivation of BLB
- ❑ Method
- ❑ Experimental Results

Core Idea: Breaking the Layer Barrier

Observation: Nonlinear layers in Transformer consist of many small linear operators

(e.g., Mul, Add)

$$\mathsf{LayerNorm}(\mathbf{X})_{i,j} = \frac{\gamma_j(\mathbf{X}_{i,j} - \boldsymbol{\mu}_i)}{\boldsymbol{\sigma}_i} + \boldsymbol{\beta}_j$$

$$\mathrm{ApproxGELU}(x) = \begin{cases} x & \text{if } x > 2.7, \\ a|x|^4 + b|x|^3 + c|x|^2 + d|x| + e + 0.5x & \text{if } |x| \leq 2.7, \\ 0 & \text{if } x < -2.7. \end{cases}$$

Core Idea: Breaking the Layer Barrier

Observation: Nonlinear layers in Transformer consist of many small linear operators (e.g., Mul, Add)

$$\mathsf{LayerNorm}(\mathbf{X})_{i,j} = \frac{\gamma_j(\mathbf{X}_{i,j} - \boldsymbol{\mu}_i)}{\boldsymbol{\sigma}_i} + \boldsymbol{\beta}_j$$

$$\mathrm{ApproxGELU}(x) = \begin{cases} x & \text{if } x > 2.7, \\ a|x|^4 + b|x|^3 + c|x|^2 + d|x| + e + 0.5x & \text{if } |x| \le 2.7, \\ 0 & \text{if } x < -2.7. \end{cases}$$

Intuition: Nonlinear layers should no longer be treated as indivisible units. A finer-grained analysis is required.

Core Idea: Breaking the Layer Barrier

BLB: From **layer-wise (LW) evaluation** to **operator-wise evaluation with fusion**

- Decompose layers into operators, classifying them into linear operators and nonlinear operators

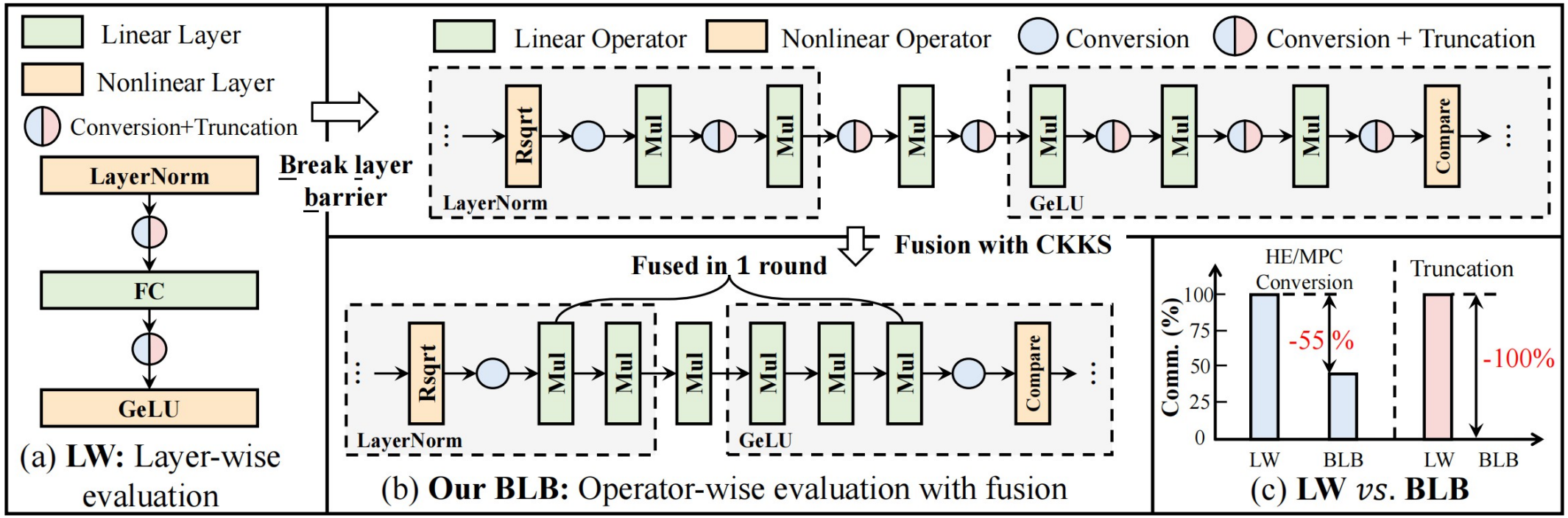

Core Idea: Breaking the Layer Barrier

BLB: From **layer-wise (LW) evaluation** to **operator-wise evaluation with fusion**

- Decompose layers into operators, classifying them into linear operators and nonlinear operators
- Fuse adjacent linear operators across layers (evaluate them within a communication round)

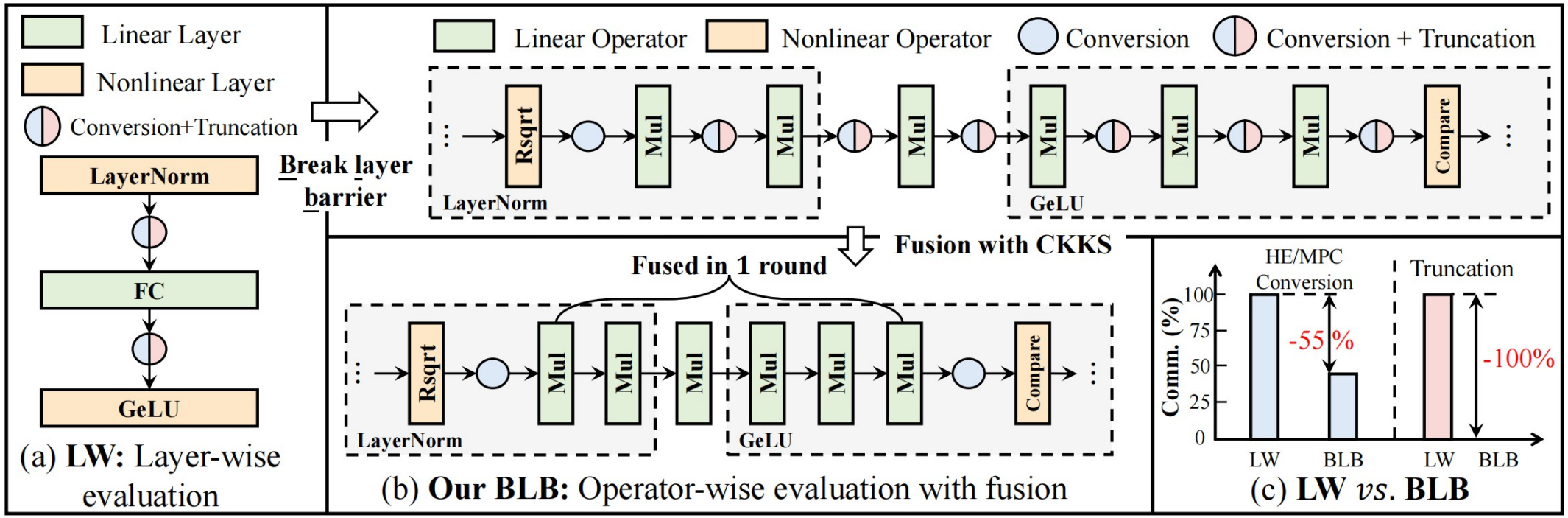

Core Idea: Breaking the Layer Barrier

BLB: From **layer-wise (LW) evaluation** to **operator-wise evaluation with fusion**

- Decompose layers into operators, classifying them into linear operators and nonlinear operators
- Fuse adjacent linear operators across layers (evaluate them within a communication round)
- Eliminate all conversions and truncations between adjacent linear operators

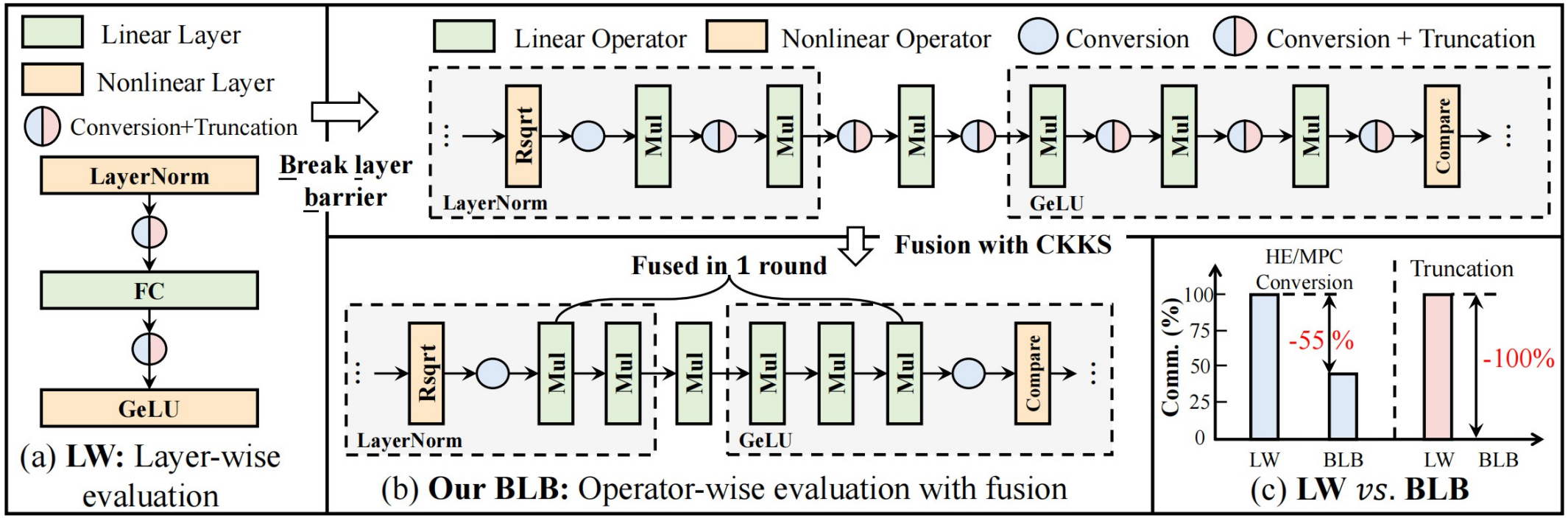

Core Idea: Breaking the Layer Barrier

Example: LayerNorm + Fully Connected Layer (FC) + GeLU

- The last two ops in LayerNorm, the subsequent FC Layer, the first three ops in GeLU can be fused
- 100% Truncation and 55% HE/MPC Conversion can be eliminated after fusion

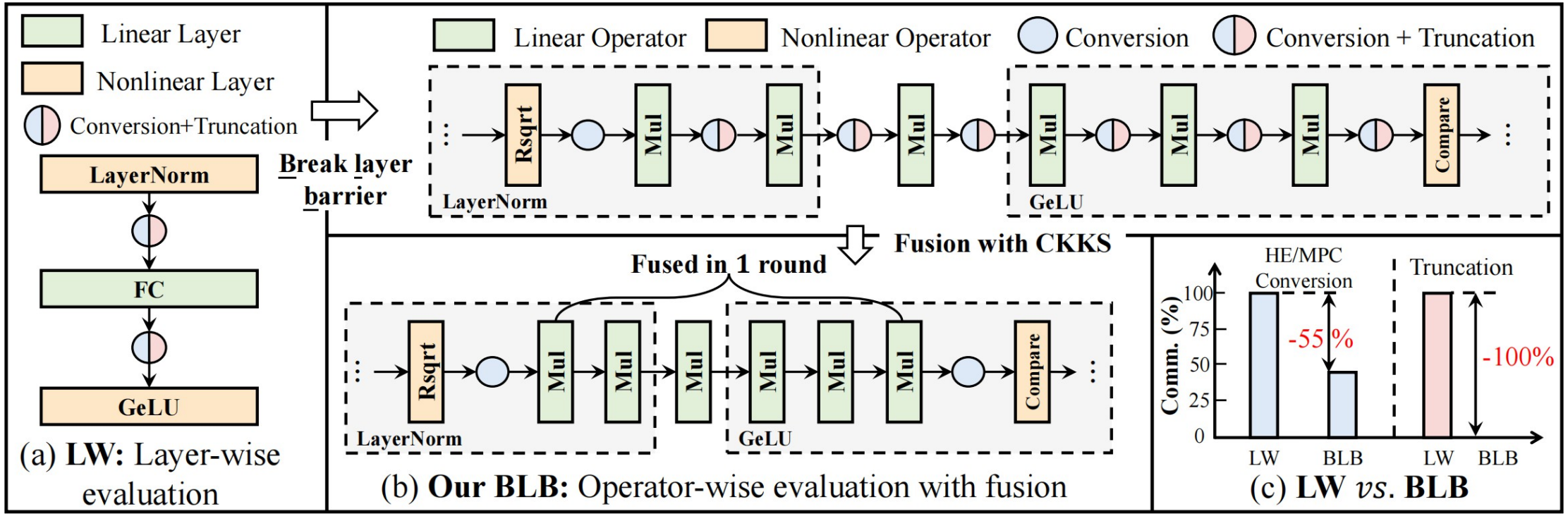

BLB Framework

Three Technical Highlights

1. **FineGrainFusion:** Systematic operator-level fusion patterns across Transformer layers

Type	Name	Description
Linear operators		
Identity	$\text{ewadd}_{cc}, \text{ewadd}_{cp}$	Element-wise addition of ct-ct, ct-pt
	$\text{ewmul}_{cc}, \text{ewmul}_{cp}$	Element-wise multiplication of ct-ct, ct-pt
Expansion	$\text{sadd}_{cc}, \text{sadd}_{cp}$	Scalar addition of ct-ct, ct-pt
	$\text{smul}_{cc}, \text{smul}_{cp}$	Scalar multiplication of ct-ct, ct-pt
Reduction	sum	Sum in a specified dimension of the input
Transformation	$\text{matmul}_{cc}, \text{matmul}_{cp}$	MatMul of ct-ct, ct-pt
Nonlinear operators		
cmp		$[\![\mathbf{1}\{x < y\}]\!]^B \leftarrow \text{cmp}([\![x]\!]^M, [\![y]\!]^M)$
mux		$[\![b \cdot x]\!]^M \leftarrow \text{mux}([\![b]\!]^B, [\![x]\!]^M)$
rec, rsqrt		Reciprocal, Reciprocal Sqrt [47]

Operator Categorization

- Identity: 输入输出的形状一致
- Expansion: 输入(L, 1)， 输出 (L, D),
  - 例如softmax和layernorm中的分母扩张。
- Reduction: 输入(L, D)， 输出 (L, 1)
  - 例如求和
- Transformation 输入(L, D) 输出 (L, D’),
  - 例如矩阵乘法

BLB Framework

Three Technical Highlights

1. **FineGrainFusion:** Systematic operator-level fusion patterns across Transformer layers

Type	Name	Description
Linear operators		
Identity	$\text{ewadd}_{cc}, \text{ewadd}_{cp}$	Element-wise addition of ct-ct, ct-pt
	$\text{ewmul}_{cc}, \text{ewmul}_{cp}$	Element-wise multiplication of ct-ct, ct-pt
Expansion	$\text{sadd}_{cc}, \text{sadd}_{cp}$	Scalar addition of ct-ct, ct-pt
	$\text{smul}_{cc}, \text{smul}_{cp}$	Scalar multiplication of ct-ct, ct-pt
Reduction	sum	Sum in a specified dimension of the input
Transformation	$\text{matmul}_{cc}, \text{matmul}_{cp}$	MatMul of ct-ct, ct-pt
Nonlinear operators		
cmp		$[\![\mathbf{1}\{x < y\}]\!]^B \leftarrow \text{cmp}([\![x]\!]^M, [\![y]\!]^M)$
mux		$[\![b \cdot x]\!]^M \leftarrow \text{mux}([\![b]\!]^B, [\![x]\!]^M)$
rec, rsqrt		Reciprocal, Reciprocal Sqrt [47]

Operator Categorization

First op \ Second op	Identity	Expansion	Reduction	Transformation
Identity	Identity	Expansion	Reduction	Transformation
Expansion	Expansion	×	Identity	Expansion
Reduction	Reduction	Identity	×	×
Transformation	Transformation	×	Reduction	Transformation

Fusion pattern analysis for linear operators

- 推理出fusion后的op类型
- 检查fusion是否导致packing方式的不一致
  - 绿色：合法且不需要额外的协议设计
  - 橙色：合法但需要额外的协议设计
  - 红色：Transformer中不会出现的情况

BLB Framework

Three Technical Highlights

1. **FineGrainFusion:** Systematic operator-level fusion patterns across Transformer layers

Table 3. Mapping type analysis. The first column and the first row (both without color) show the mapping types of first and second operators, respectively, before fusion, and the colored cells show the mapping type of the operator after fusion. Green implies that these fusion combinations can be fused directly (i.e., they are profitable). Red implies that these fusions are unprofitable. Yellow implies that further profiling is required to determine profitability.

First op \ Second op	One-to-One	One-to-Many	Many-to-Many	Reorganize	Shuffle
One-to-One	One-to-One	One-to-Many	Many-to-Many	Reorganize	Shuffle
One-to-Many	One-to-Many	One-to-Many	×	One-to-Many	One-to-Many
Many-to-Many	Many-to-Many	Many-to-Many	×	Many-to-Many	Many-to-Many
Reorganize	Reorganize	One-to-Many	Many-to-Many	Reorganize	Reorganize
Shuffle	Shuffle	One-to-Many	Many-to-Many	Reorganize	Shuffle

- DNNFusion: Accelerating Deep Neural Networks Execution with Advanced Operator Fusion（PLDI, 2021）

BLB Framework

Three Technical Highlights

1. **FineGrainFusion:** Systematic operator-level fusion patterns across Transformer layers

Type	Name	Description
Linear operators		
Identity	$\text{ewadd}_{cc}, \text{ewadd}_{cp}$	Element-wise addition of ct-ct, ct-pt
	$\text{ewmul}_{cc}, \text{ewmul}_{cp}$	Element-wise multiplication of ct-ct, ct-pt
Expansion	$\text{sadd}_{cc}, \text{sadd}_{cp}$	Scalar addition of ct-ct, ct-pt
	$\text{smul}_{cc}, \text{smul}_{cp}$	Scalar multiplication of ct-ct, ct-pt
Reduction	sum	Sum in a specified dimension of the input
Transformation	$\text{matmul}_{cc}, \text{matmul}_{cp}$	MatMul of ct-ct, ct-pt
Nonlinear operators		
cmp		$[\![\mathbf{1}\{x < y\}]\!]^B \leftarrow \text{cmp}([\![x]\!]^M, [\![y]\!]^M)$
mux		$[\![b \cdot x]\!]^M \leftarrow \text{mux}([\![b]\!]^B, [\![x]\!]^M)$
rec, rsqrt		Reciprocal, Reciprocal Sqrt [47]

Operator Categorization

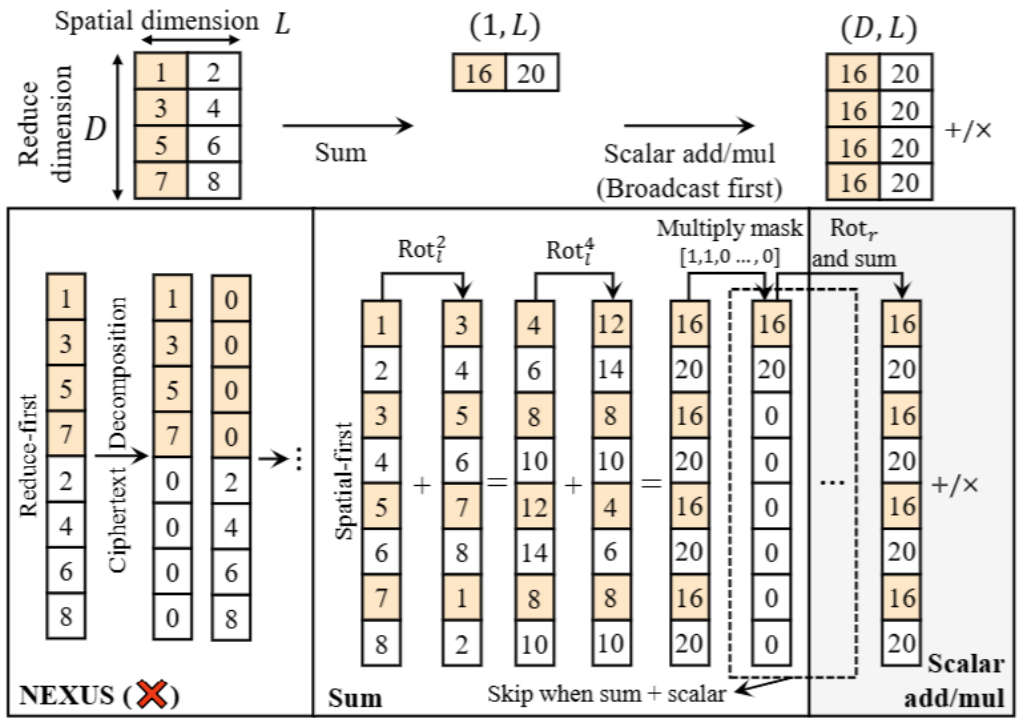

总体fusion方案

- 把所有的层展开为基础operator
- 按照fusion 规则匹配所有合法的层

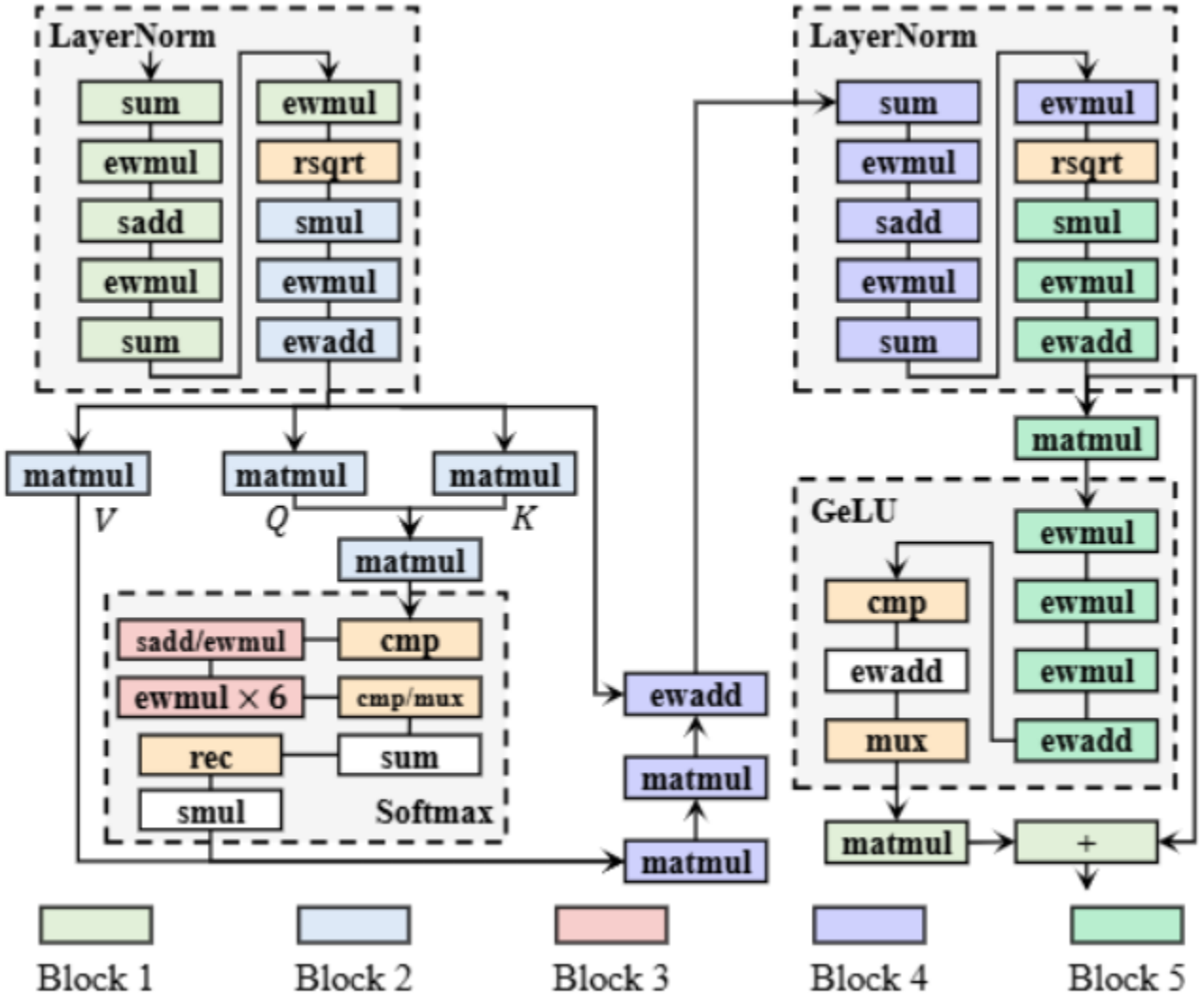

BLB Framework

Three Technical Highlights

2. Rotation-Efficient Ct-Ct MatMul: 29 × and 8 × fewer HE rotations than BOLT (S&P'24) and Powerformer (ACL'25)

- Optimized for QK^T and $\mathrm{Softmax} \times V$; multi-head packing; BSGS optimization

$\mathrm{matmul}_{\mathrm{cc}}$		BOLT [45]	Powerformer [46]	BLB
$Q_h K_h^T$ $h \in [H]$	# Rot	$O(\frac{md}{s}(m+\log_2 m))$ 18432	$O(\frac{md}{s}(\frac{5}{2}m+4\sqrt{m}))$ 5856	$O(\frac{md}{s}(\frac{\sqrt{d}}{H}+\sqrt{m})+m)$ 640
	# CMult.	$O(\frac{m^2 d}{s})$ 2048	$O(\frac{m^2 d}{s})$ 1024	$O(\frac{m^2 d}{s})$ 1024
$\mathrm{Softmax} \times V_h$ $h \in [H]$	# Rot	$O(\frac{m^2 H}{s}(m+\log_2 m))$ 28560	$O(\frac{m^2 H}{s}(\frac{5}{2}m+4\sqrt{m}))$ 6508	$O(\frac{m^2 H}{s}(\sqrt{\frac{m}{H}}+\sqrt{m})+m)$ 1056
	# CMult.	$O(\frac{m^2 d}{s})$ 1024	$O(\frac{m^3 H}{s})$ 2048	$O(\frac{m^3 H}{s})$ 2048

Transformation + transformation： Fused MatMuls

- Q_h，K_h，attn_h的打包受到先前矩阵乘法协议的限制
- 修改打包需要昂贵的同态运算

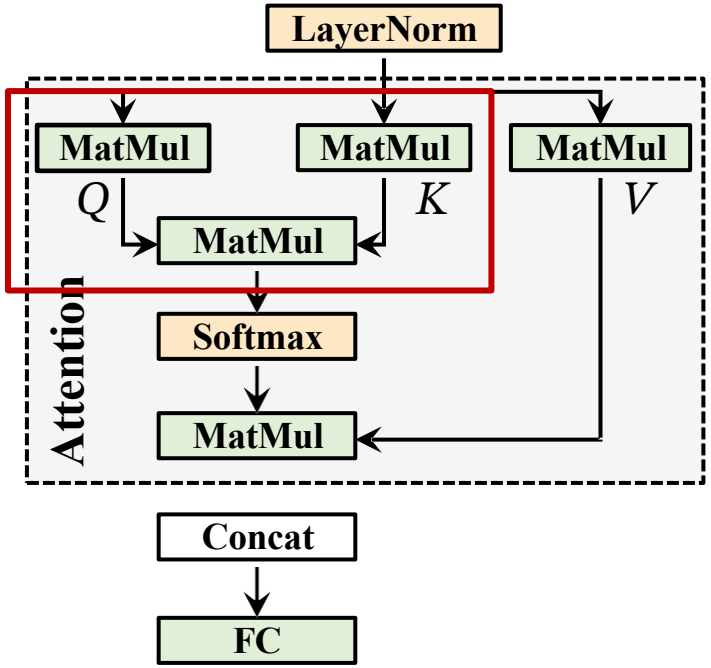

同态矩阵乘法

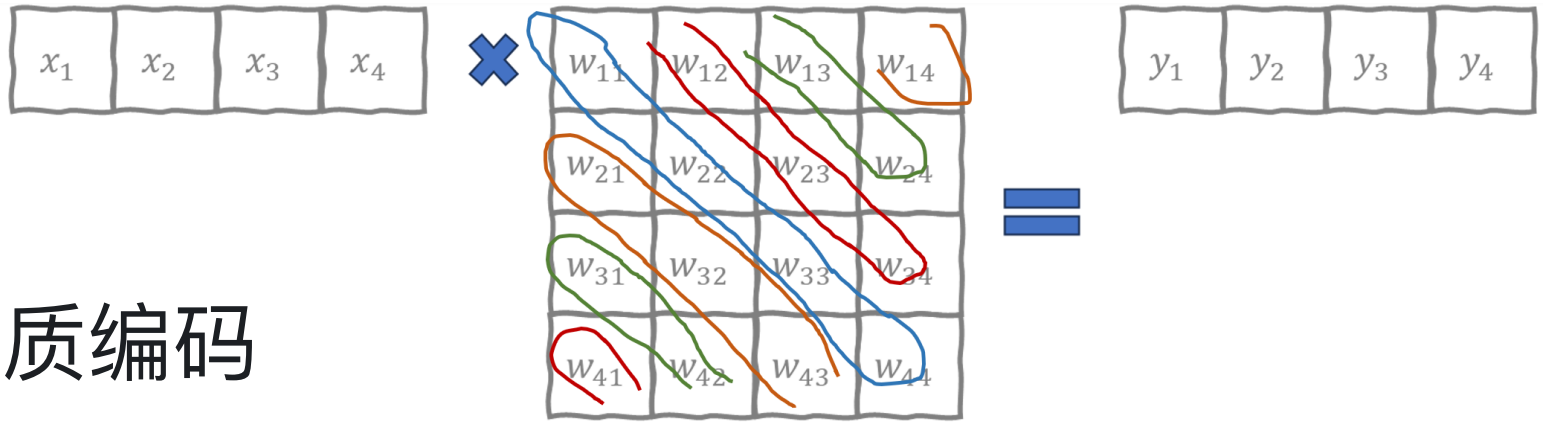

利用HE密文的SIMD性质编码

密文操作

- 乘（开销高）
- 加
- 旋转（开销高）

效率取决于编码方式

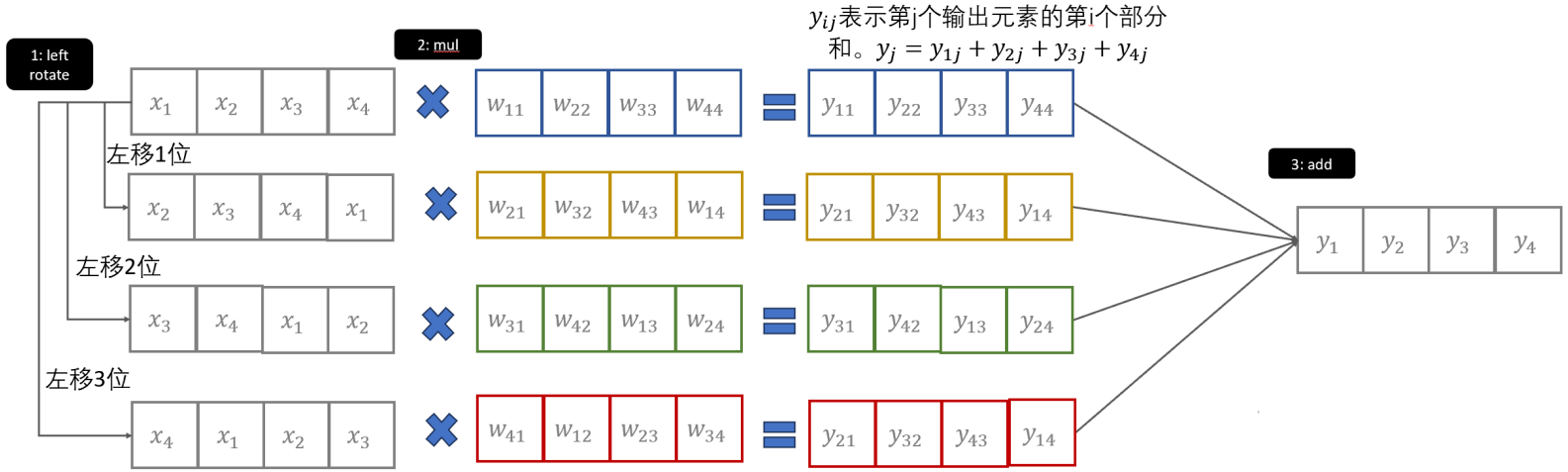

Transformation + transformation： Fused MatMuls

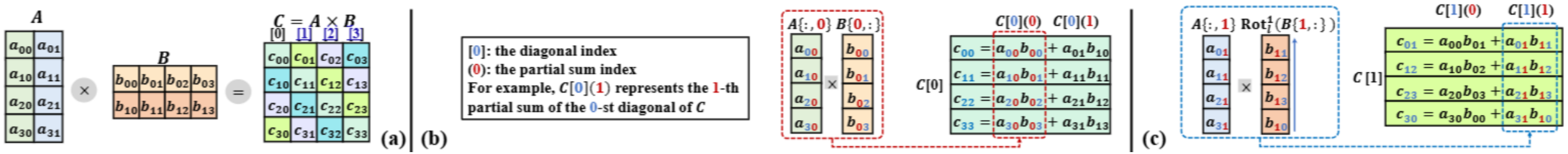

(a)矩阵-矩阵乘法的语义

(b) 行和列相乘产生对角线的部分和

(c) 不同对应的行和列相乘得到的是相同对角线的不同部分和

(d) 对B做左移可以产生不同对角线的部分和

Transformation + transformation： Fused MatMuls

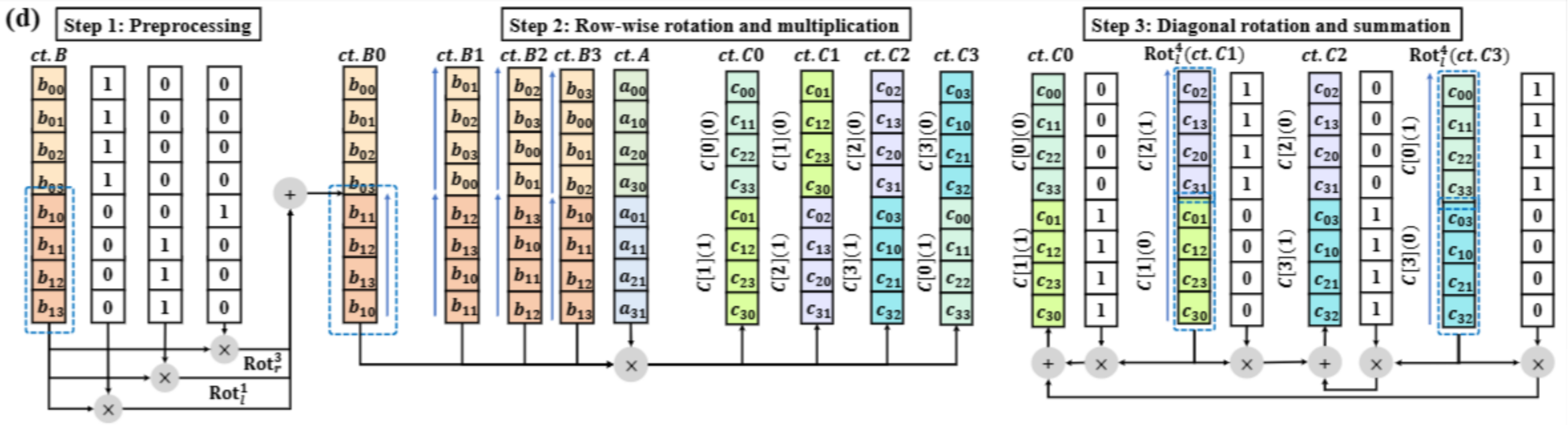

(a)A和B都是按照行packing，遵循上一层的输出方式

(b)对B预处理，做好对应旋转

(c)A和所有的B旋转后的结果相乘得到不同对角线的部分和。

(d)累加部分和

BLB Framework

Three Technical Highlights

3. CKKS+MPC Conversion: First secure protocol to support CKKS/MPC conversion

- We use CKKS instead of BFV to control the ciphertext bitwidth growth
- Previous CKKS-MPC conversion protocol is insecure, leaking computation results

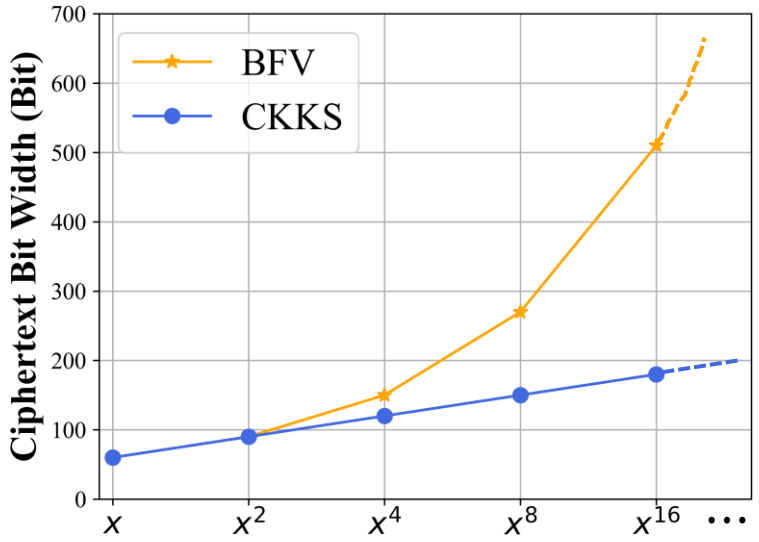

Fig: CKKS ct biwdith grows linearly

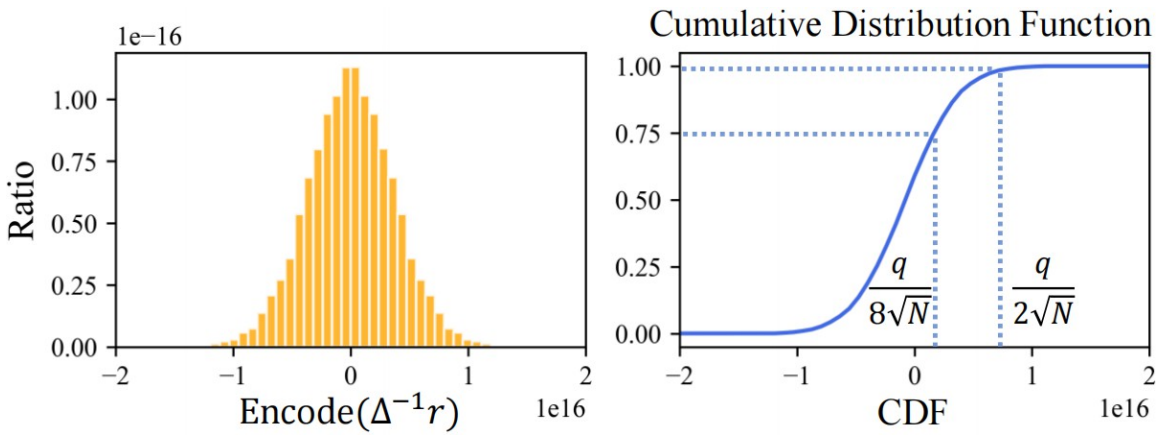

Fig: CKKS Encode function narrows random mask

Outline

- ❑ Background of Private Transformer Inference
- ❑ Motivation of BLB
- ❑ Method
- ❑ Experimental Results

Experimental Results

Experimental Setup

- Implementation: SEAL, EzPC, Phantom FHE (GPU)
- Models: GPT2-base, BERT-base, BERT-large
- Baselines
  - HE/2PC: Iron (NeurIPS'22), BOLT (S&P'24), Bumblebee (NDSS'25)
  - 3PC: SIGMA (PETS'24), MPCFormer (ICLR'23)
  - FHE: NEXUS (NDSS'25)

通信优化结果

- 4 × *vs.* BOLT (S&P'24)
- 2 × *vs.* Bumblebee (NDSS'25)

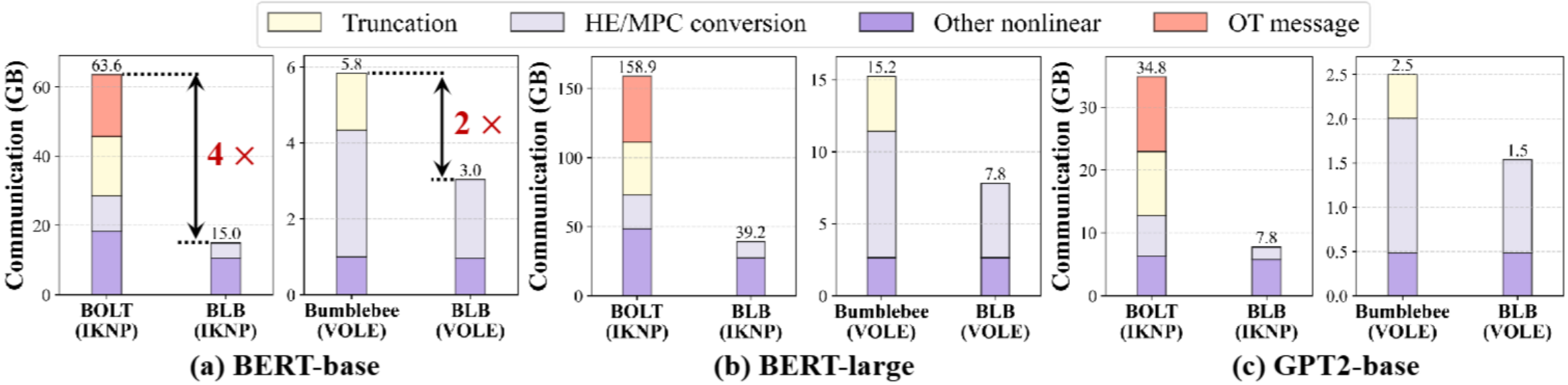

端到端比较--BOLT

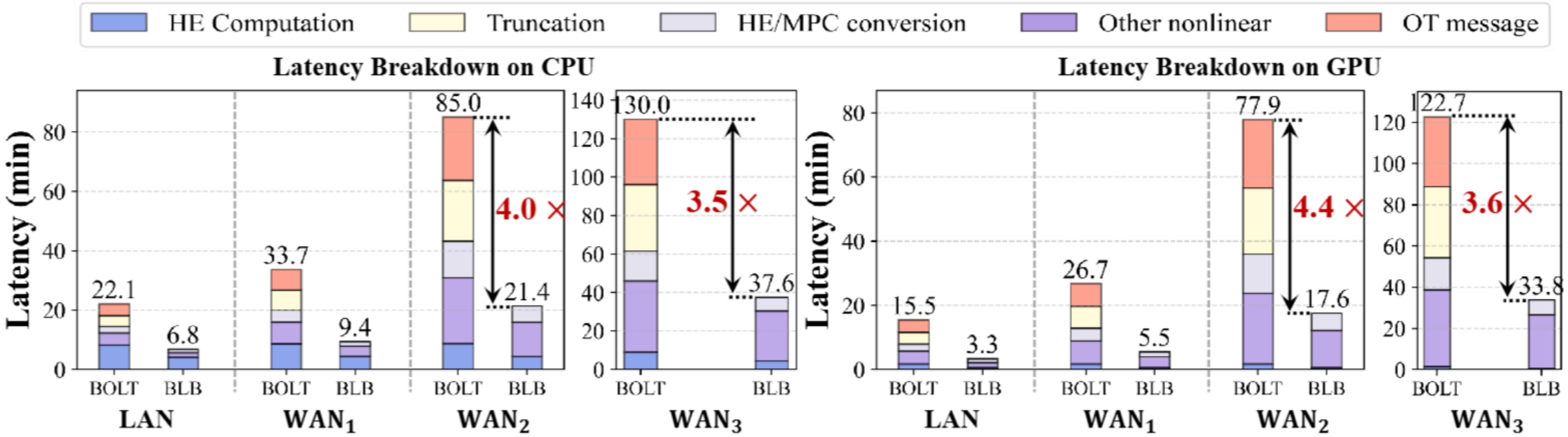

Figure 12: Latency comparison between BLB and BOLT on BERT-base model on CPU and GPU. The bandwidths and round-trip times of four network conditions are: LAN:{ 1Gbps, 0.3ms}, WAN_1:{400Mbps, 4ms}, WAN_2:{100Mbps, 4ms}, WAN_3:{100Mbps, 80ms}.

端到端比较--BumbleBee

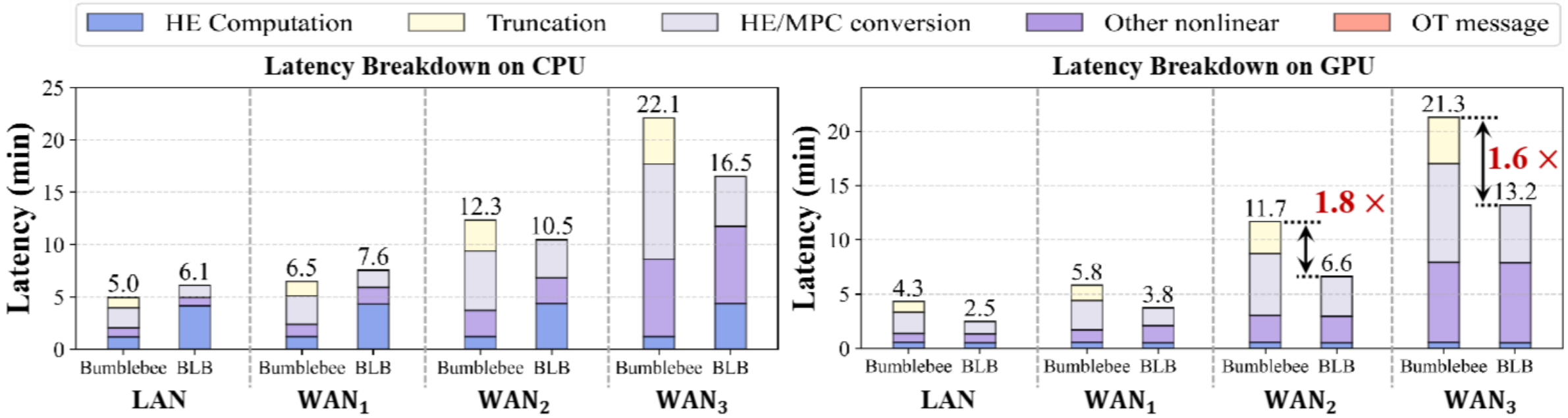

Figure 13: Latency comparison between BLB and Bumblebee on BERT-base model on CPU and GPU. The bandwidths and round-trip times of four network conditions are: LAN:{ 1Gbps, 0.3ms}, WAN_1:{400Mbps, 4ms}, WAN_2:{100Mbps, 4ms}, WAN_3:{100Mbps, 80ms}.

Experimental Results

Communication Reduction

- **21 ×** *vs.* BOLT (S&P'24)
- **2 ×** *vs.* Bumblebee (NDSS'25)

Latency Reduction

- Up to **29 ×** on CPU
- Up to **13 ×** on GPU

Model	Framework	Latency (min)			Comm. (GB)
		LAN	WAN_2	WAN_3	
GPT2-base 64 input tokens	SIGMA [26]*	7.7	25.1	38.5	28.7
	MPCFormer [39]*	2.1	7.2	10.5	7.3
	BOLT [45]	9.7	34.0	53.6	34.8
	Bumblebee [41]	**2.9**	**5.2**	12.3	2.5
	BLB	4.0	6.8	**10.2**	**1.5**
	BOLT (GPU) [45]	7.6	31.8	51.6	34.8
	Bumblebee (GPU) [41]	2.6	4.9	12.0	2.5
	BLB (GPU)	**2.0**	**3.9**	**8.1**	**1.5**
BERT-base 128 input tokens	NEXUS [56]	457	458	470	0.2
	Iron [27]	66.7	/	/	76.5
	SIGMA [26]*	7.8	30.4	48.6	34.4
	MPCFormer [39]*	5.5	18.0	27.5	12.1
	BOLT [45]	22.1	85.0	130.0	63.6
	Bumblebee [41]	**5.0**	12.3	22.1	5.8
	BLB	6.1	**10.5**	**17.2**	**3.0**
	NEXUS (GPU) [56]	19.9	20.8	32.5	0.2
	BOLT (GPU) [45]	15.5	77.9	122.7	63.6
	Bumblebee (GPU) [41]	4.3	11.6	21.3	5.8
	BLB (GPU)	**2.5**	**6.6**	**13.2**	**3.0**
BERT-large 128 input tokens	Iron [27]	92.0	/	/	220.0
	SIGMA [26]*	20.5	102.5	155.5	92.8
	MPCFormer [39]*	7.7	34.1	52.0	32.6
	BOLT [45]	57.6	222.0	274.4	158.9
	Bumblebee [41]	**10.6**	32.4	51.3	15.2
	BLB	15.1	**29.0**	**37.7**	**7.8**
	BOLT (GPU) [45]	43.8	208.2	260.6	158.9
	Bumblebee (GPU) [41]	9.7	30.8	49.2	15.2
	BLB (GPU)	**6.6**	**16.2**	**24.9**	**7.8**

* Frameworks that require three parties.

Conclusion

- BLB breaks the **"one-layer, one-protocol"** paradigm
- Enables **operator-level fusion** with CKKS+MPC
- Achieves **significant communication and latency reduction**

From layers to operators — it's time to break the barrier

Conclusion

亮点总结

- 明文推理idea迁移到密文推理场景
- 单独的特例->通用的框架
- 充分的实验